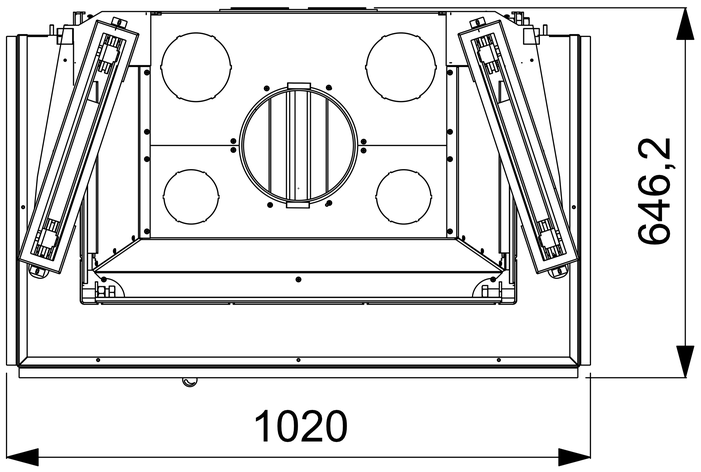

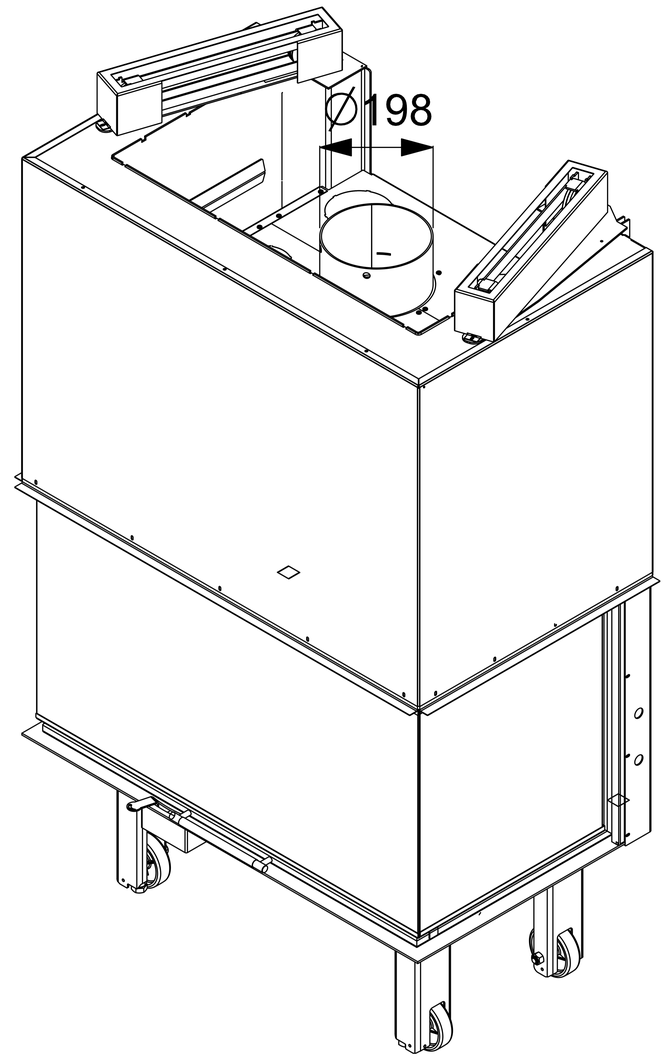

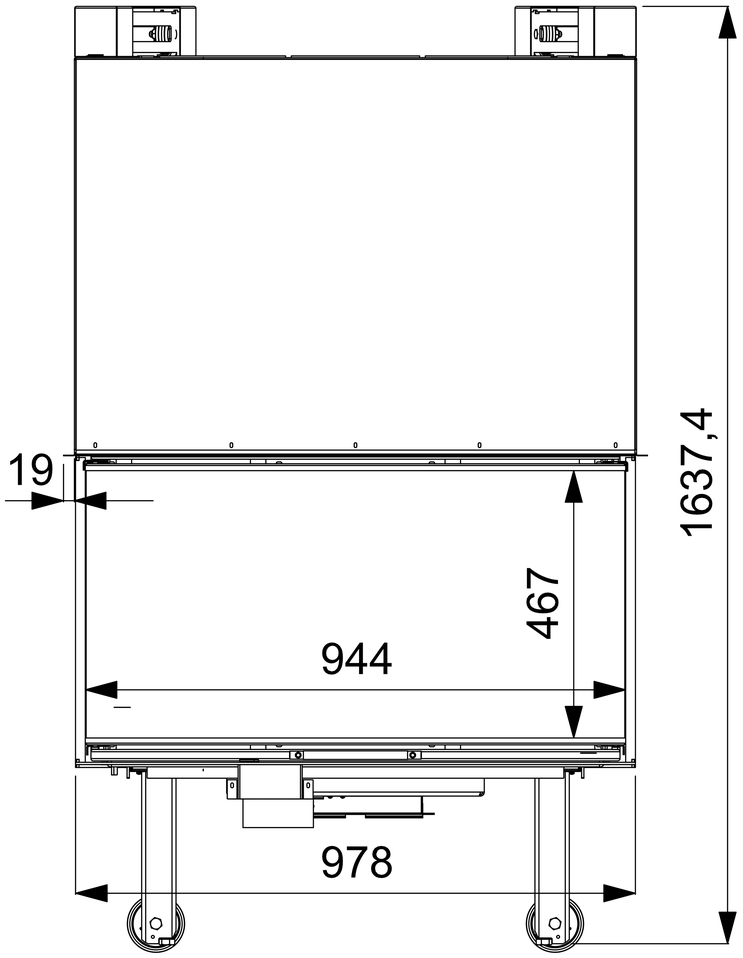

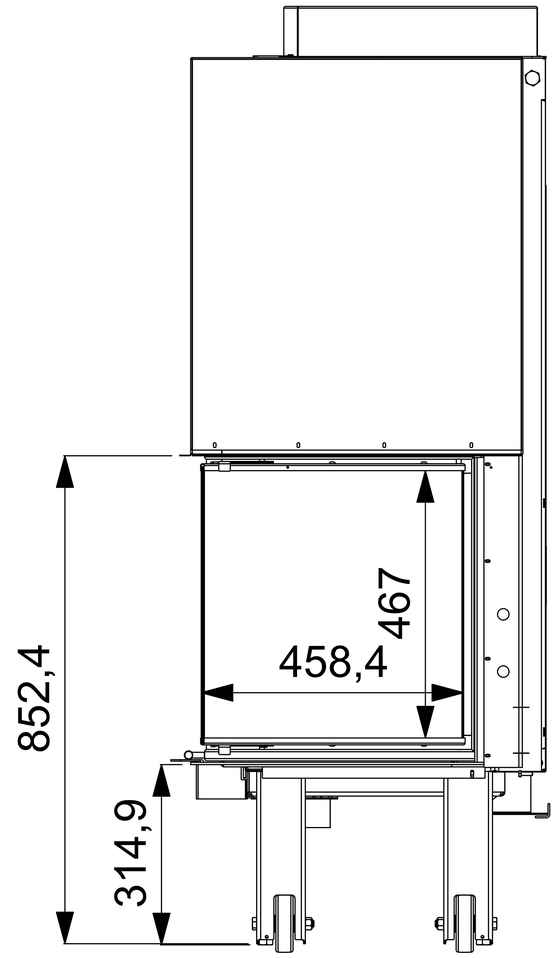

PRODUCT NAME	LK 900 THREE SIDE
PRODUCT CODE	6-36J-1-1-3
DATE	14-06-2025
NOTES	All dimentions in mm
	LAVAKAMIN