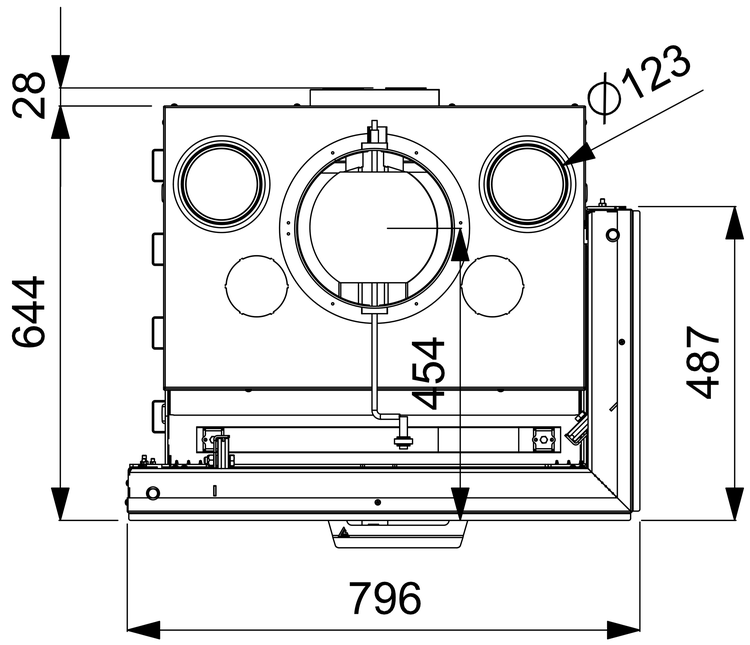

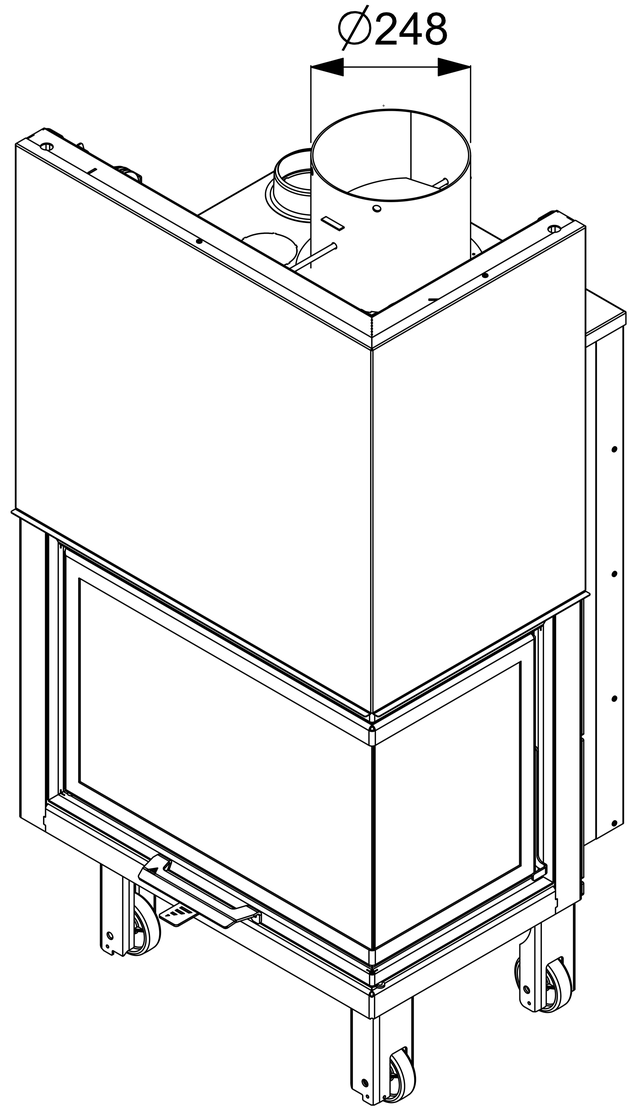

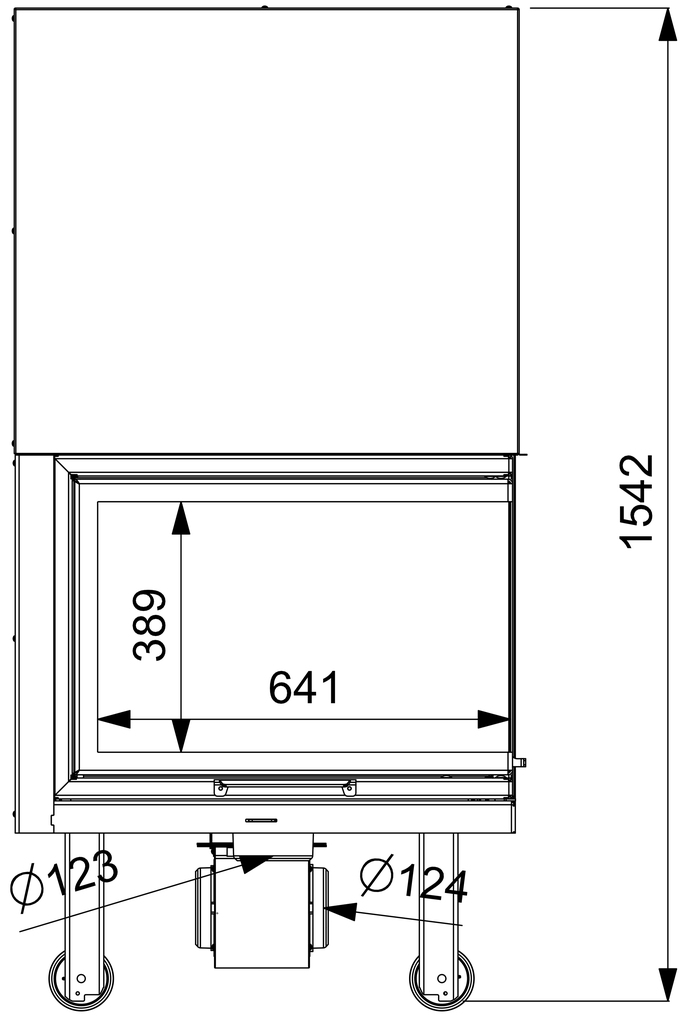

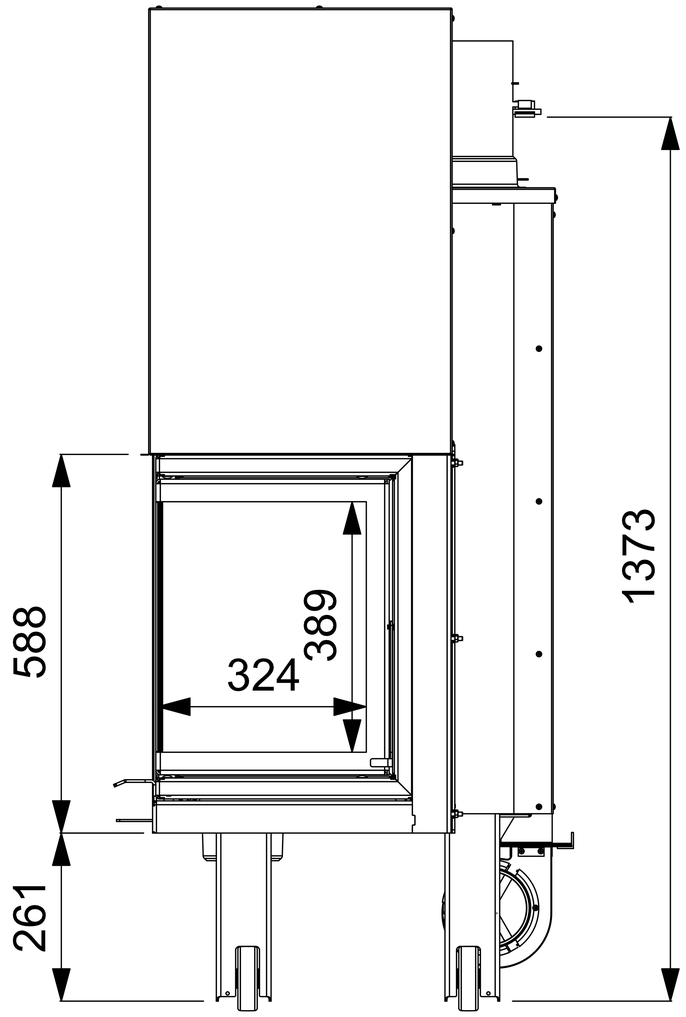

PRODUCT NAME	AERO-S 80 ANGLE
PRODUCT CODE	6-45-1-1-8
DATE	30-01-2026
NOTES	ALL DIMENSIONS IN mm
	LAVAKAMIN