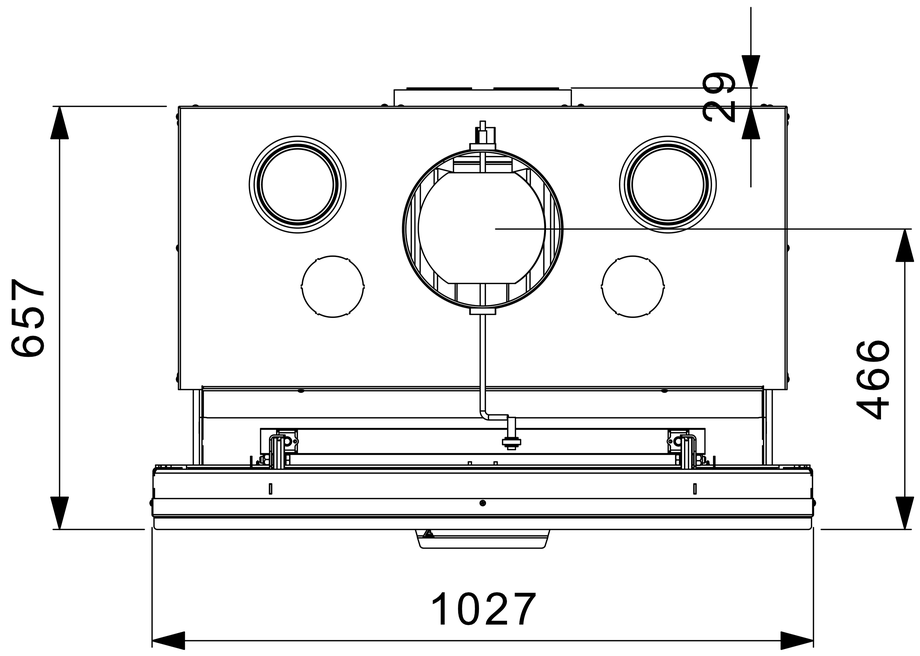

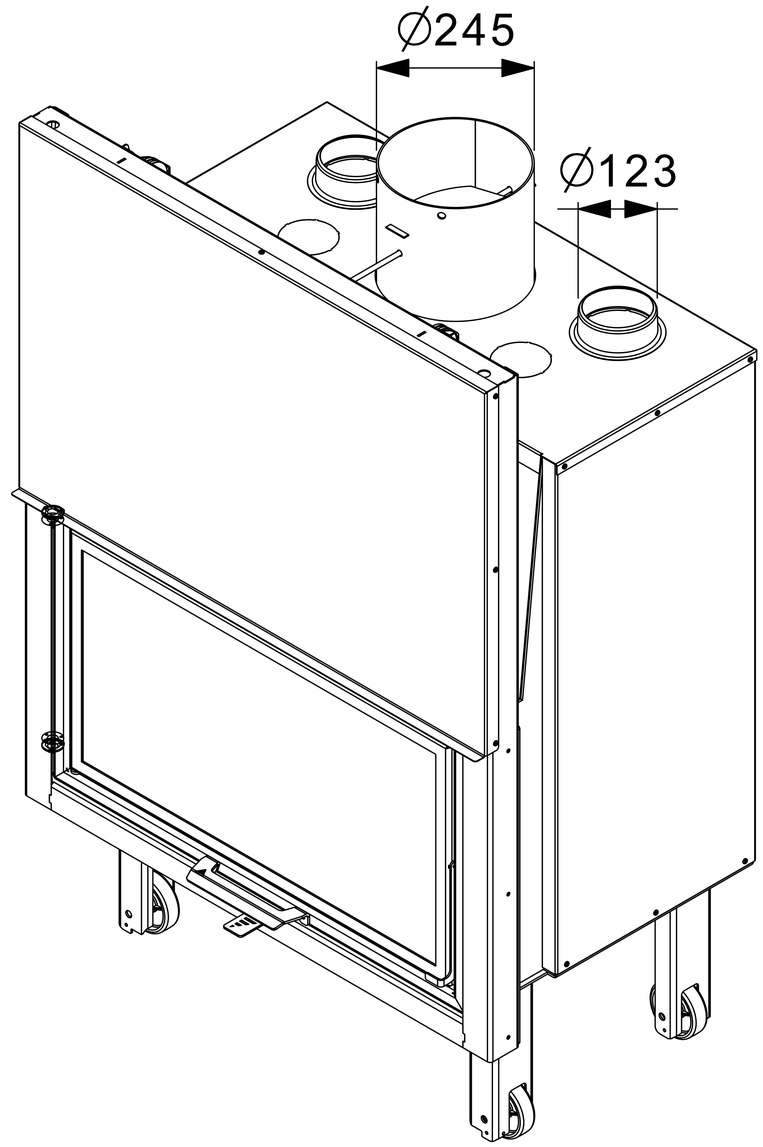

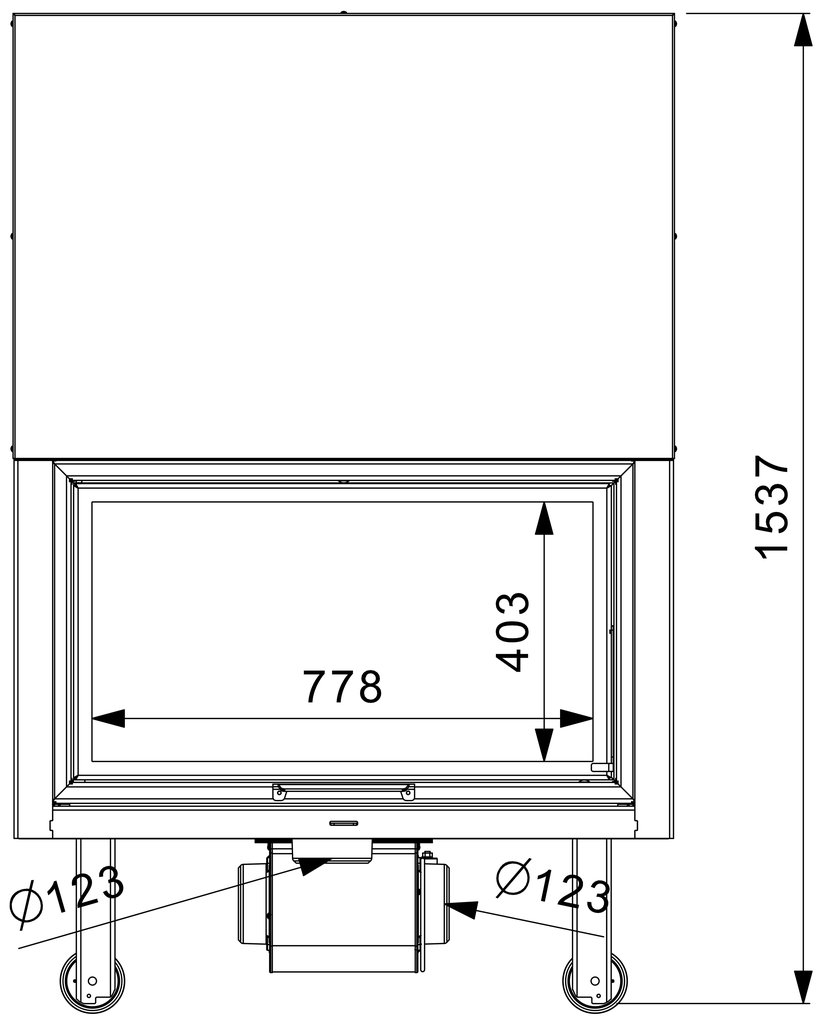

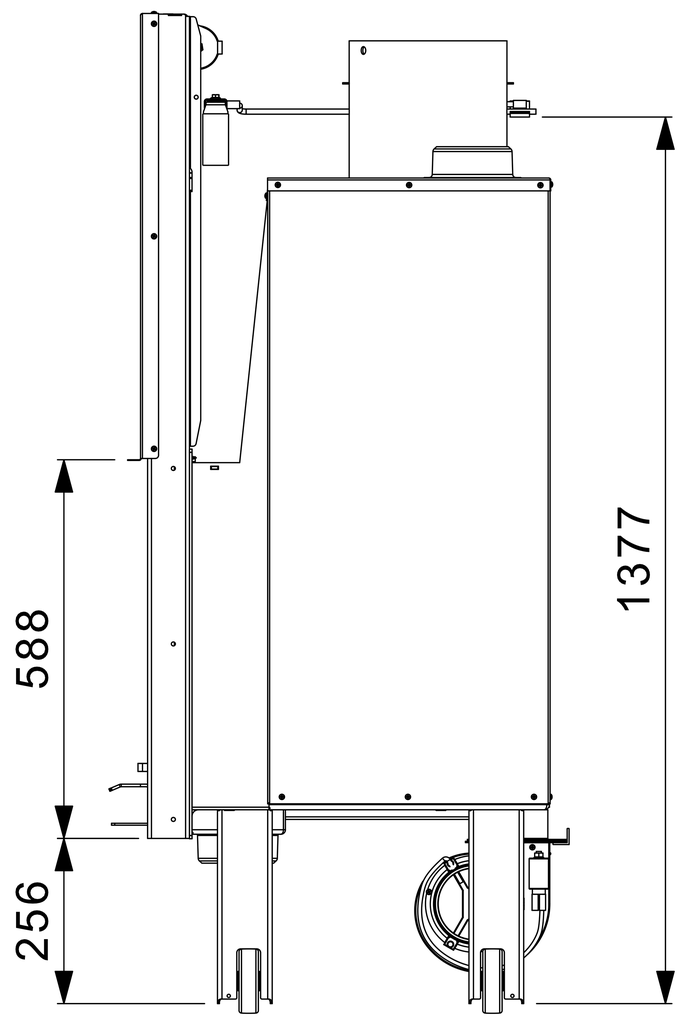

PRODUCT NAME	AERO-S 103 FLAT
PRODUCT CODE	6-42-1-1-12
DATE	30-01-2026
NOTES	ALL DIMENSIONS IN mm
	LAVAKAMIN