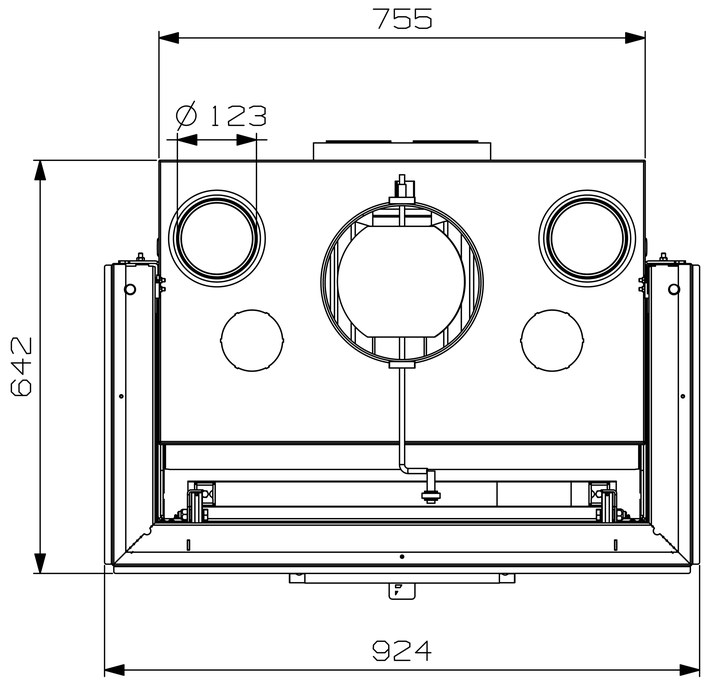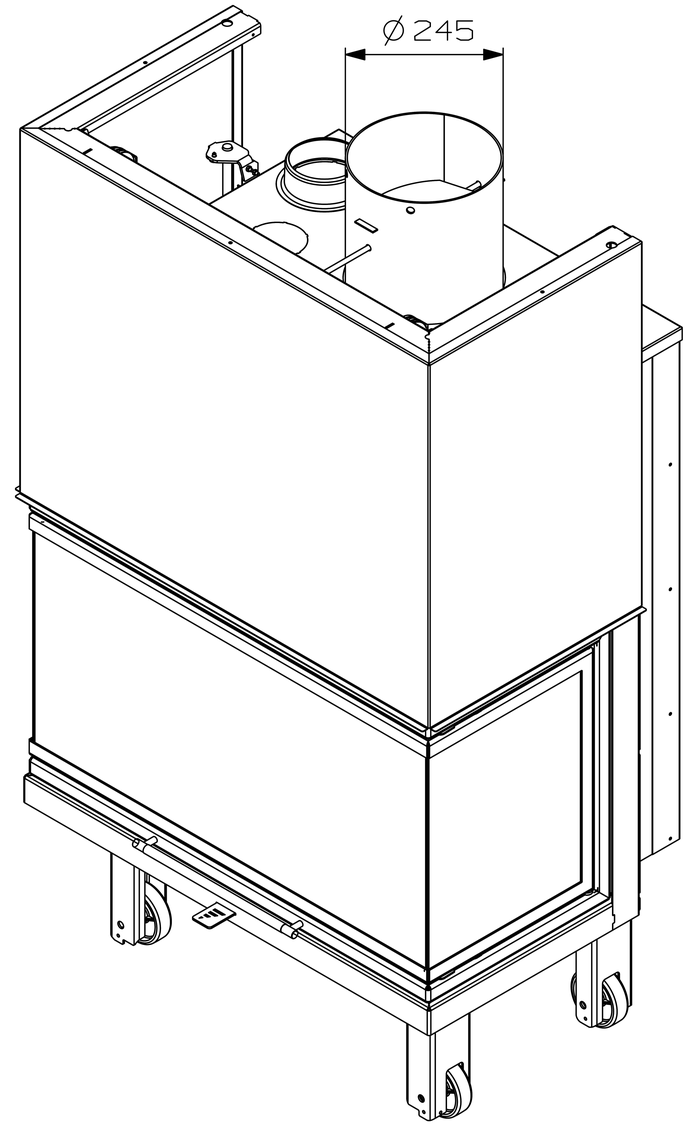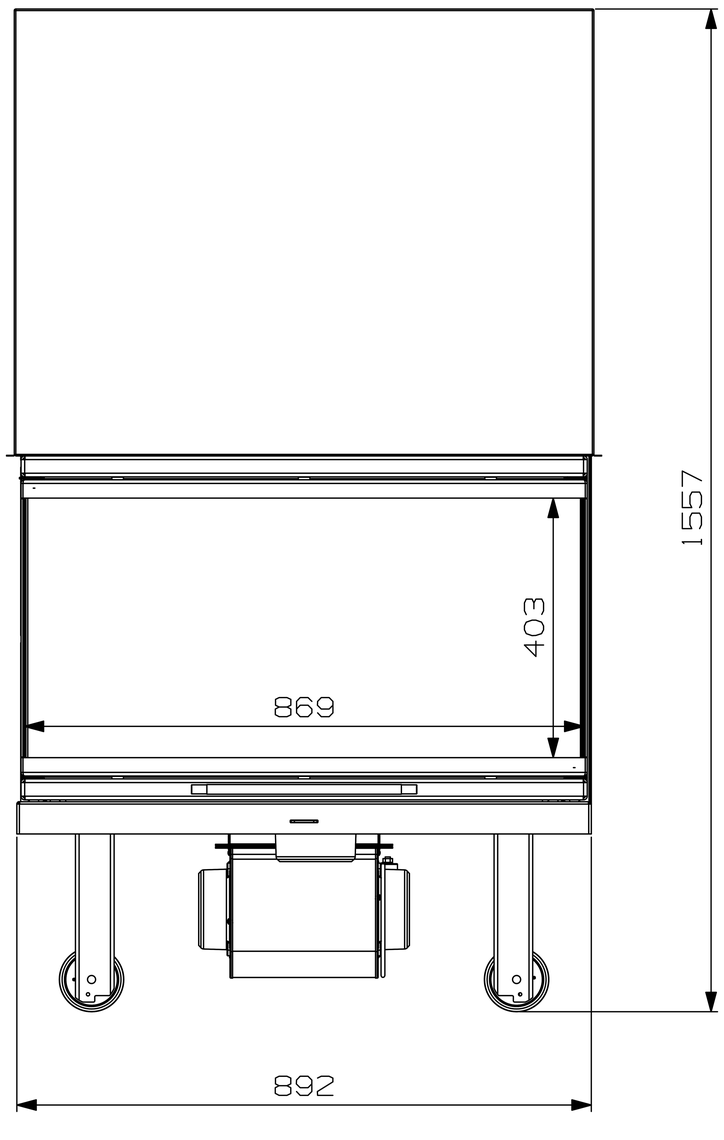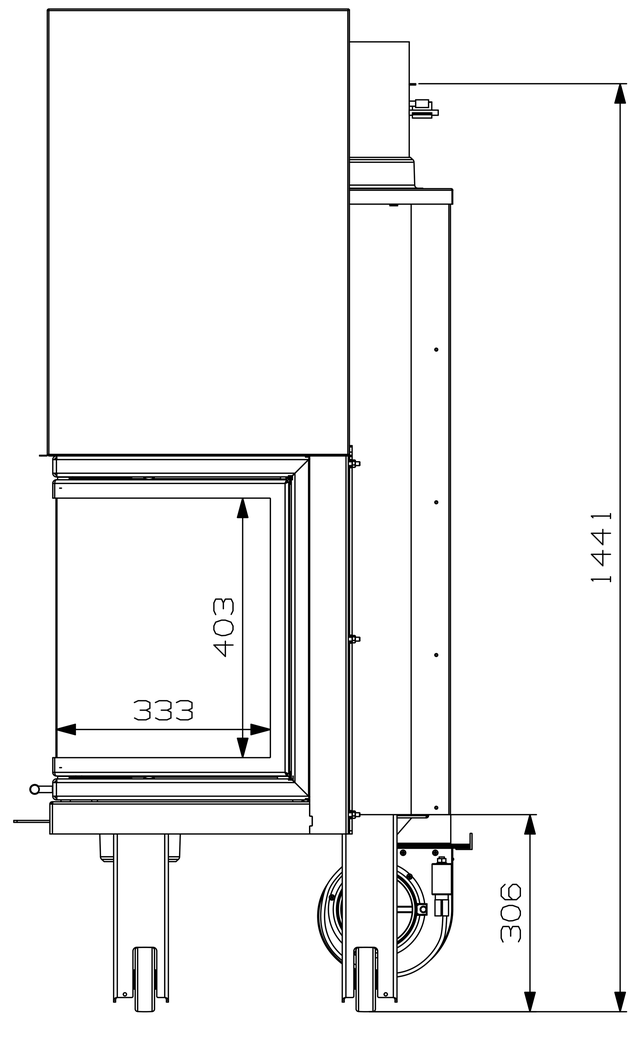AERO-S THREE SIDE 90