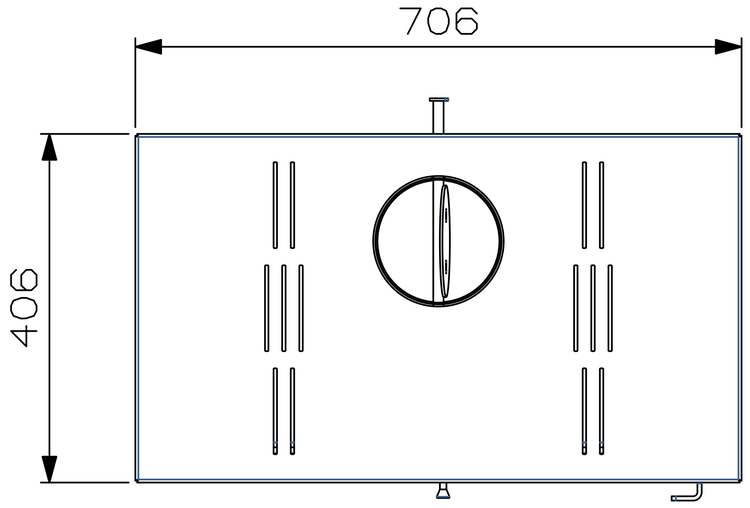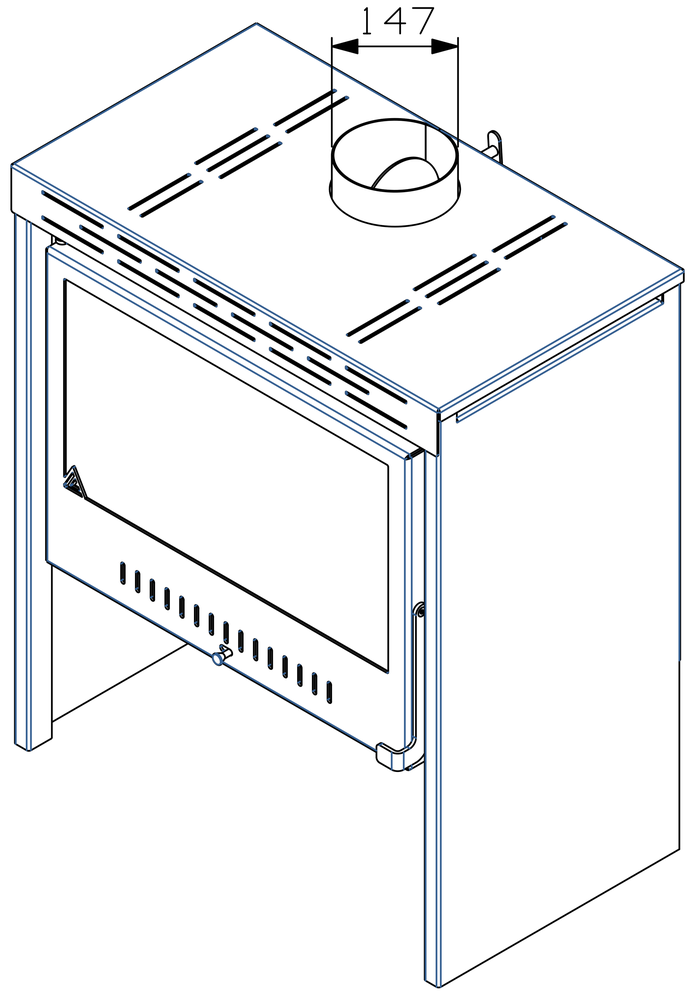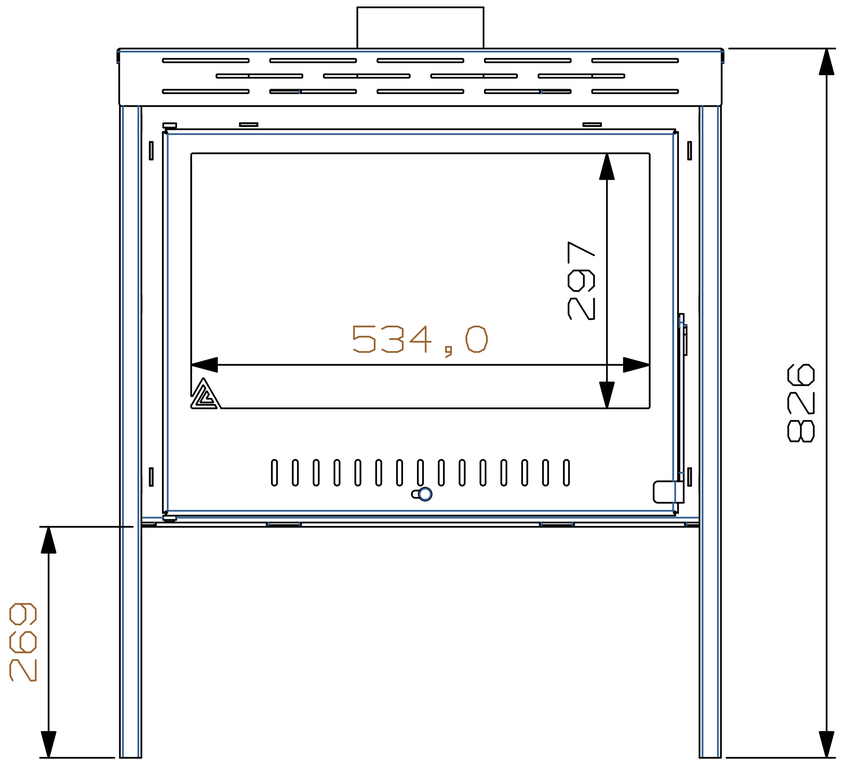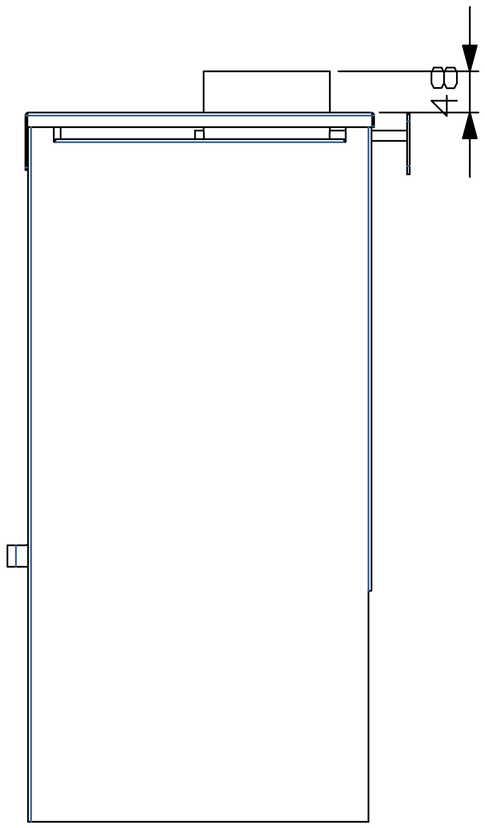FIRESTOVE V70