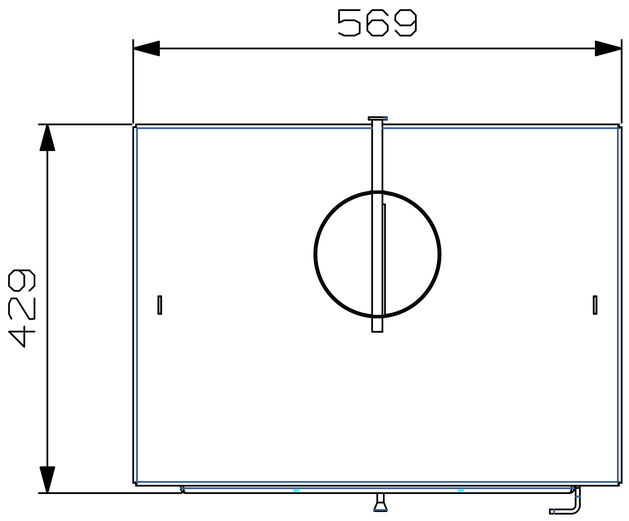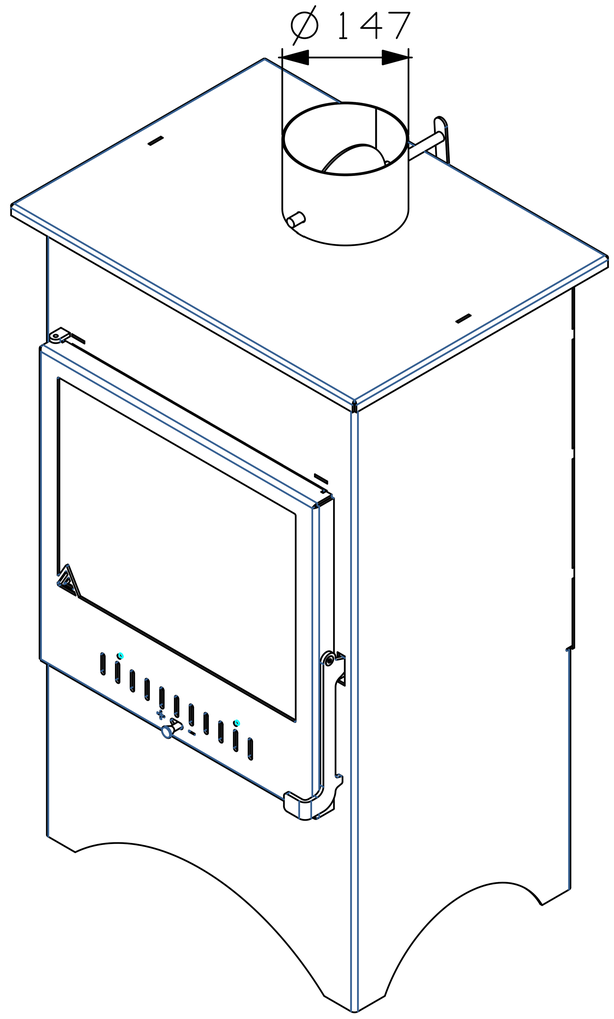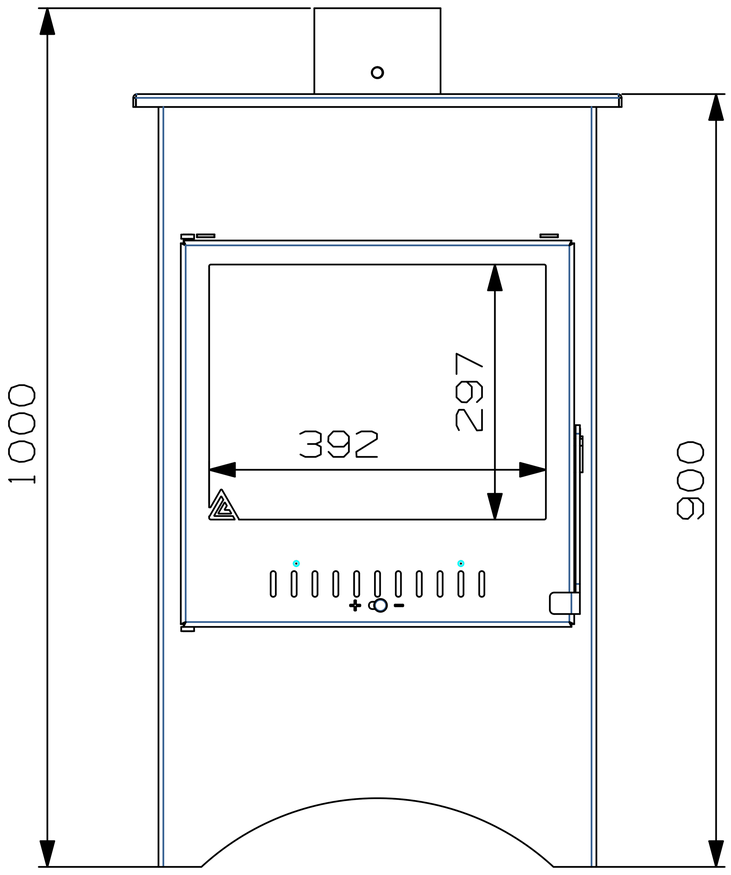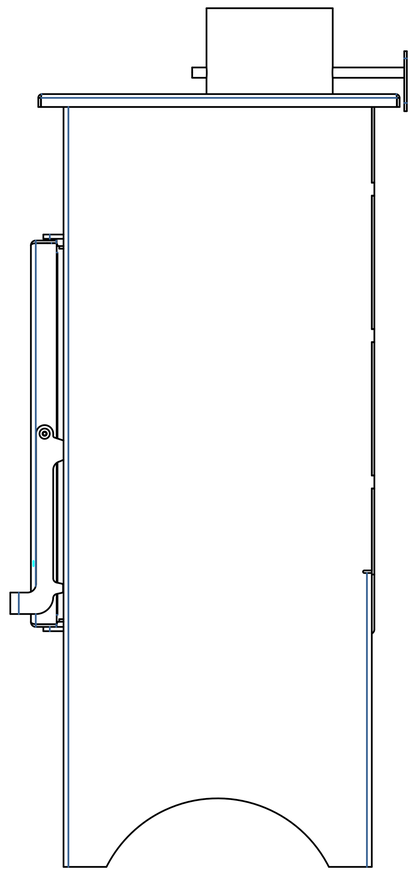FIRESTOVE V50