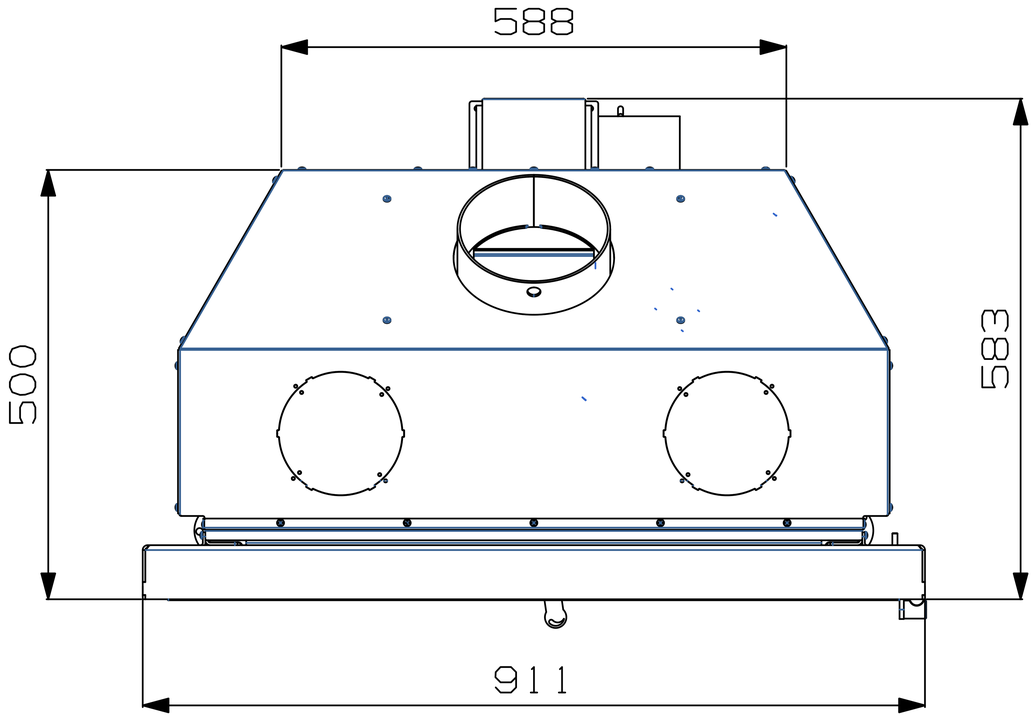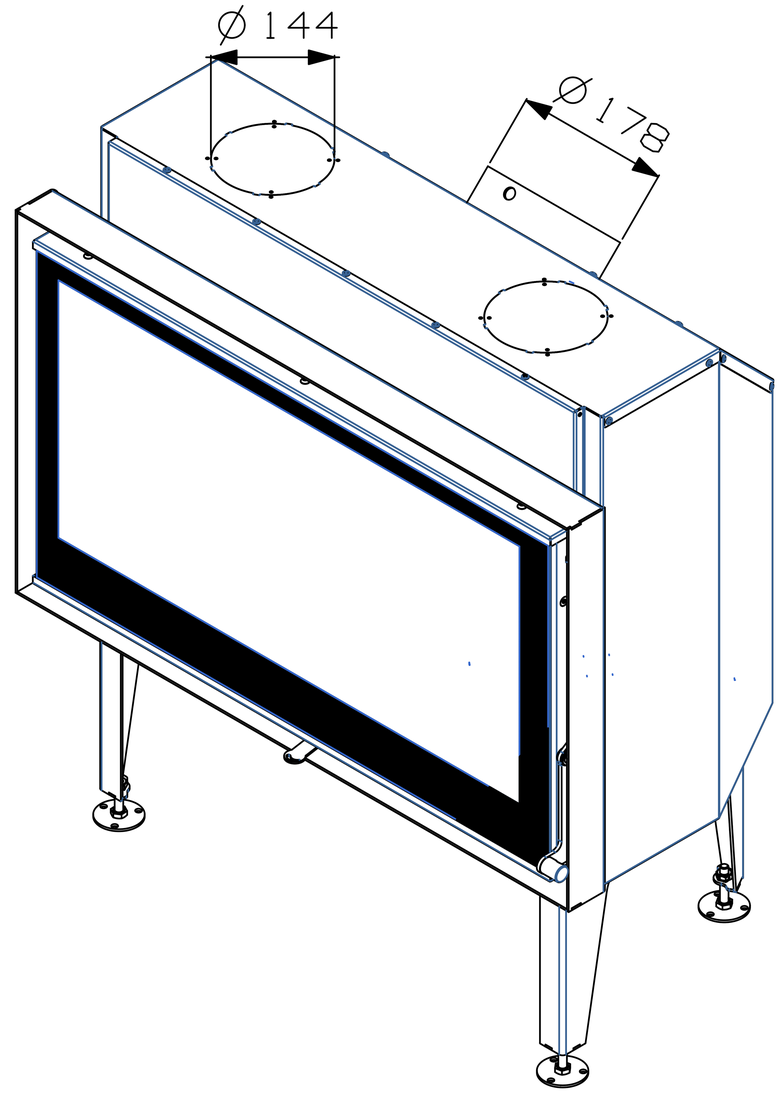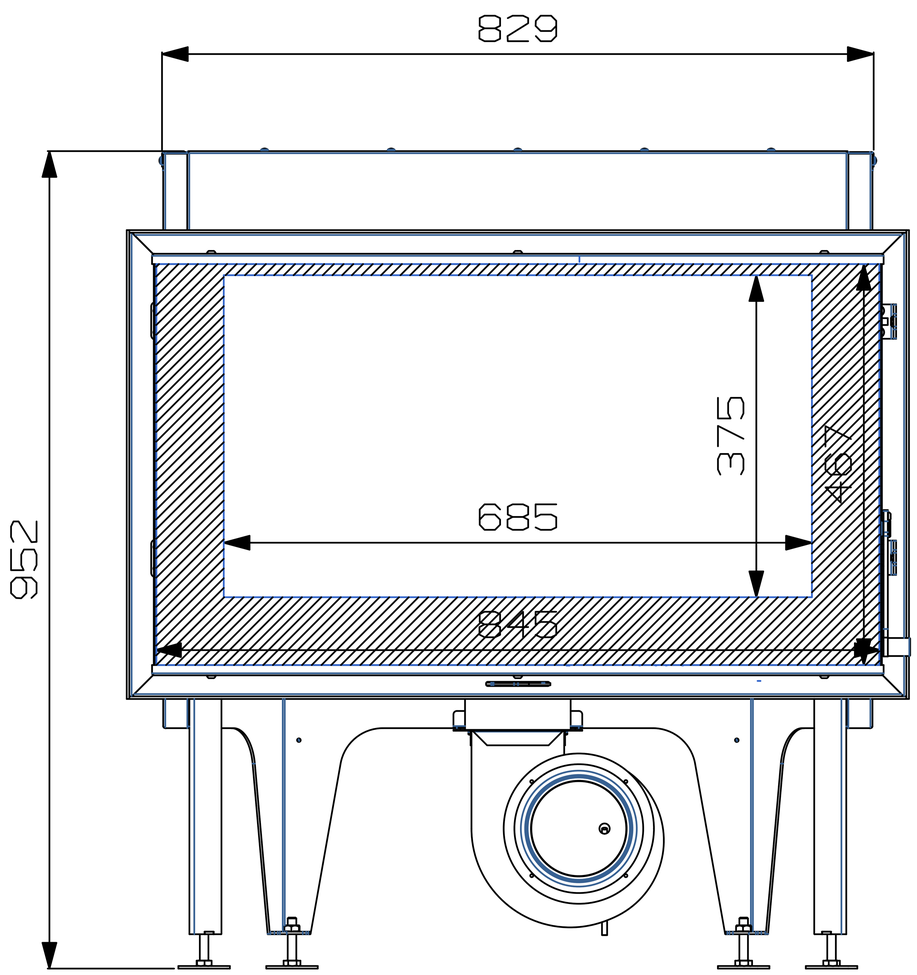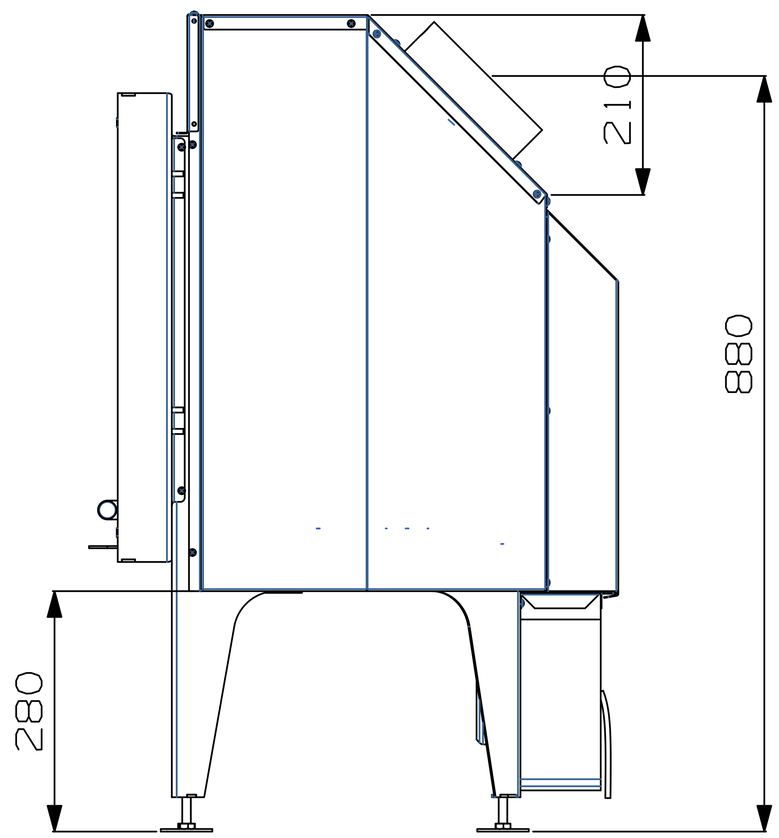FR 850 Flat