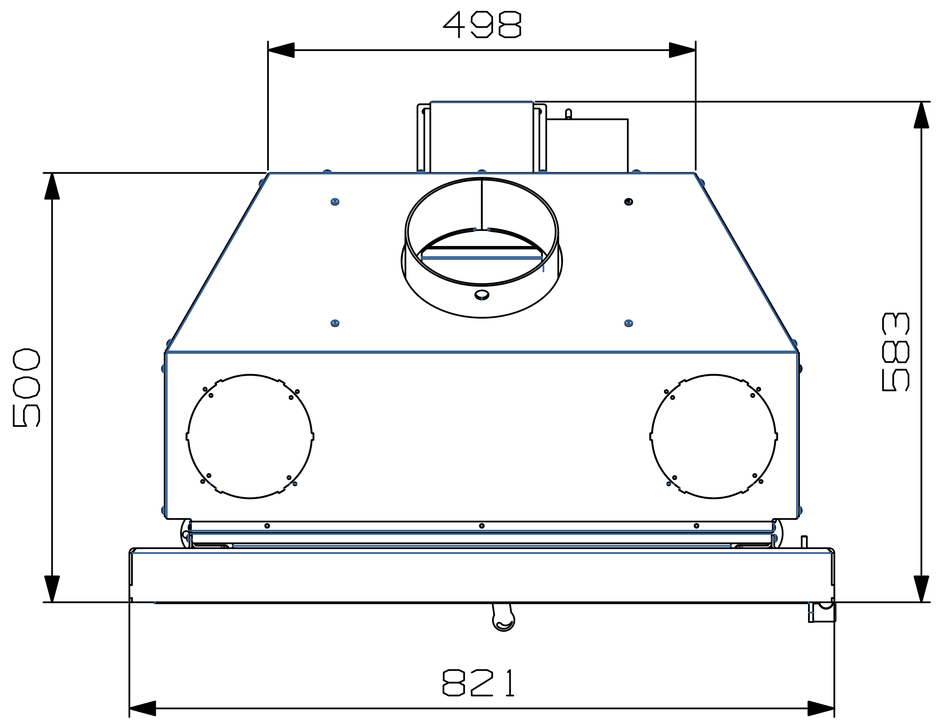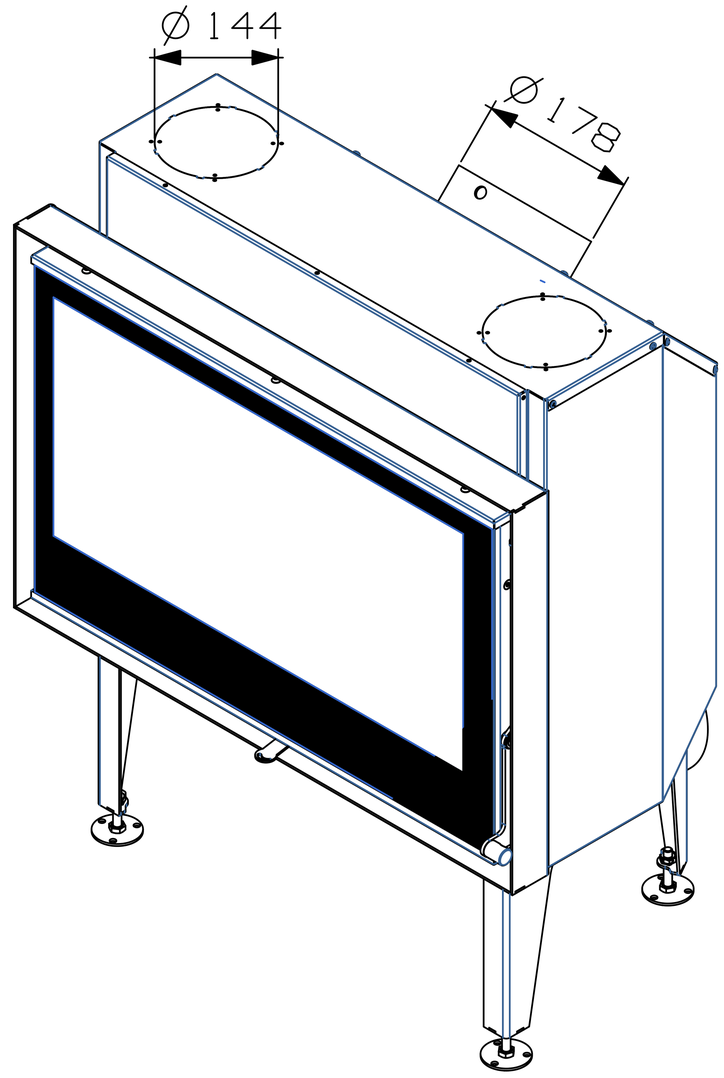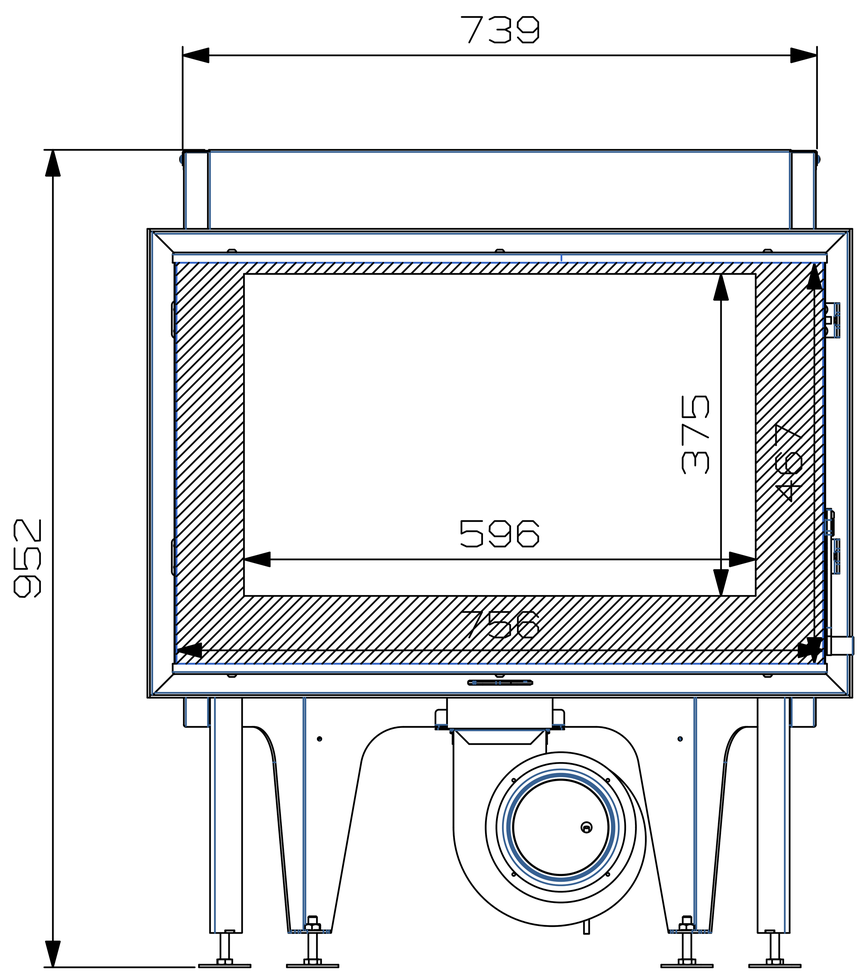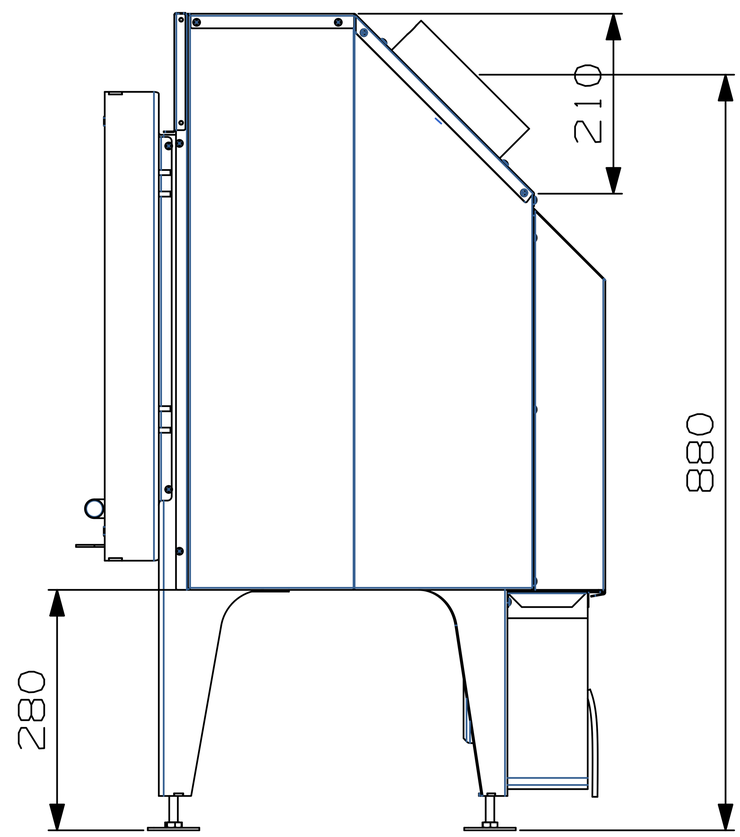FR 760 Flat