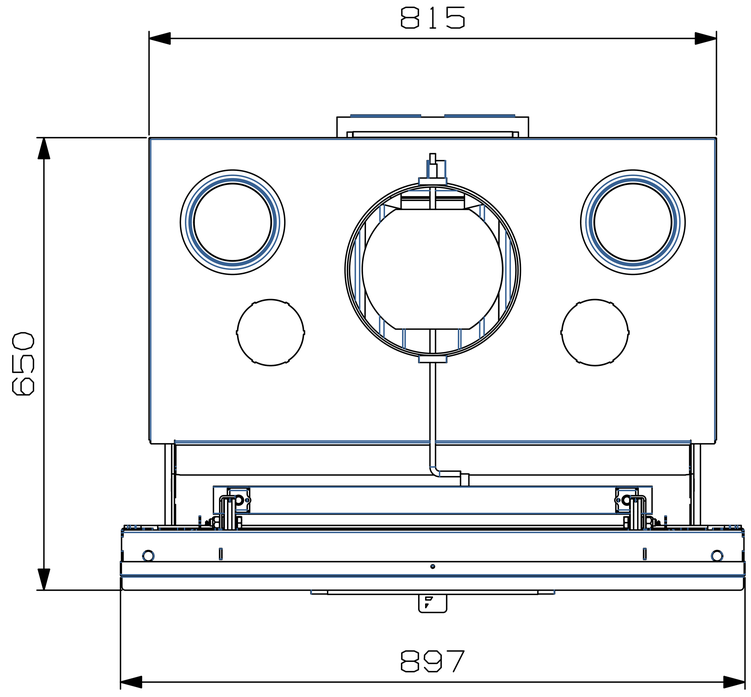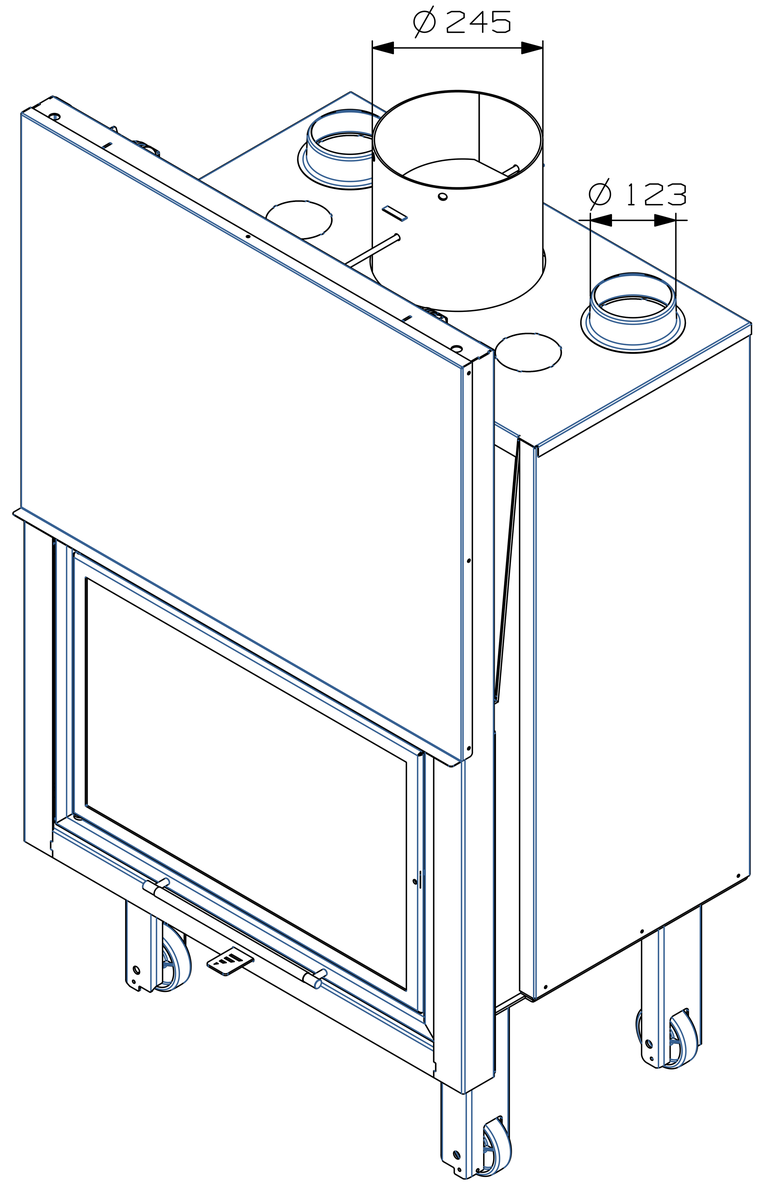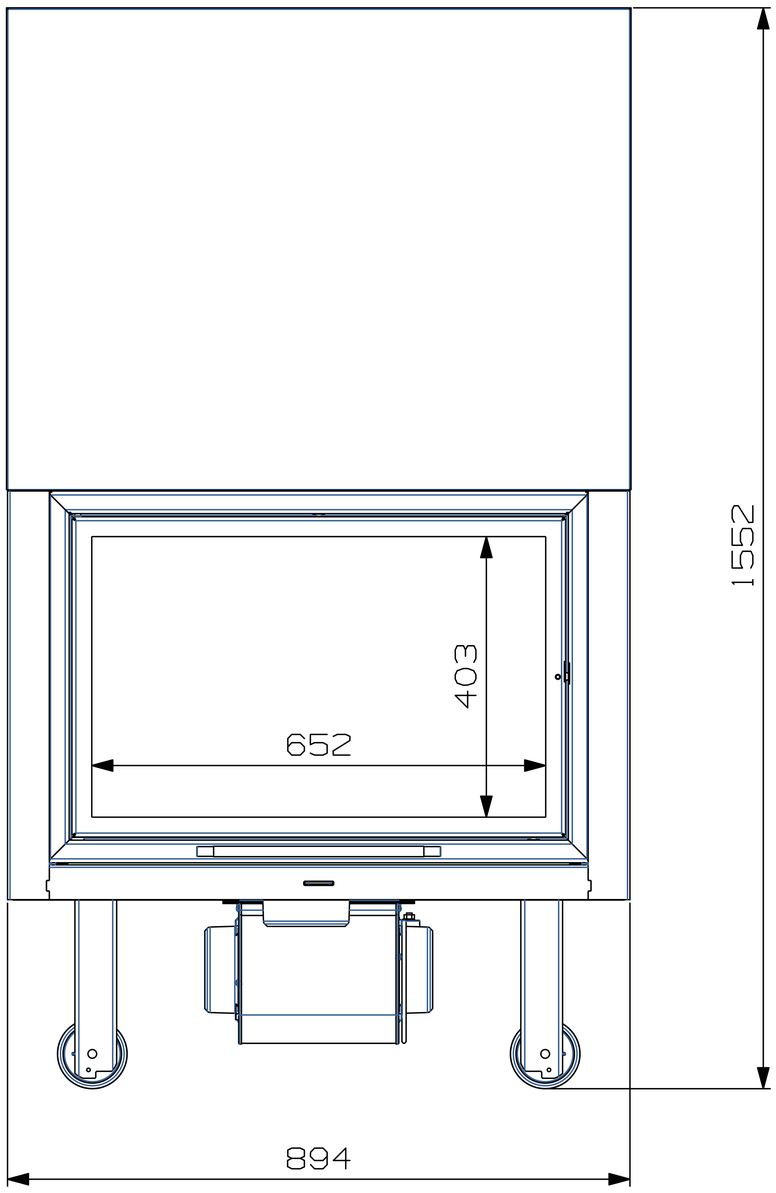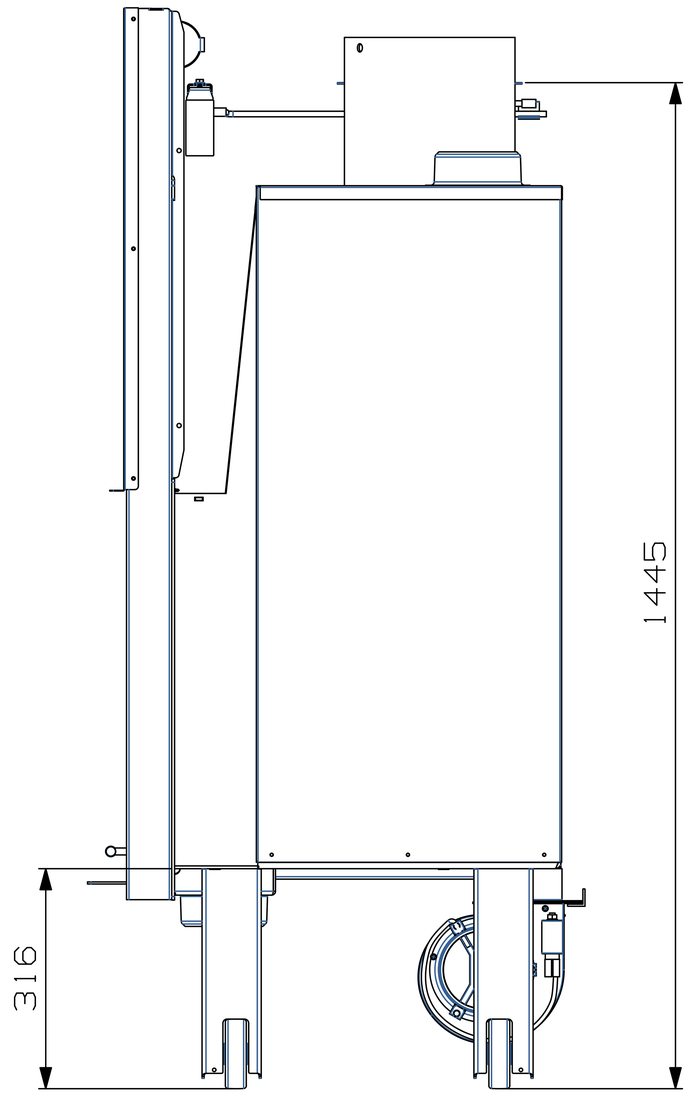AERO-S FLAT 90