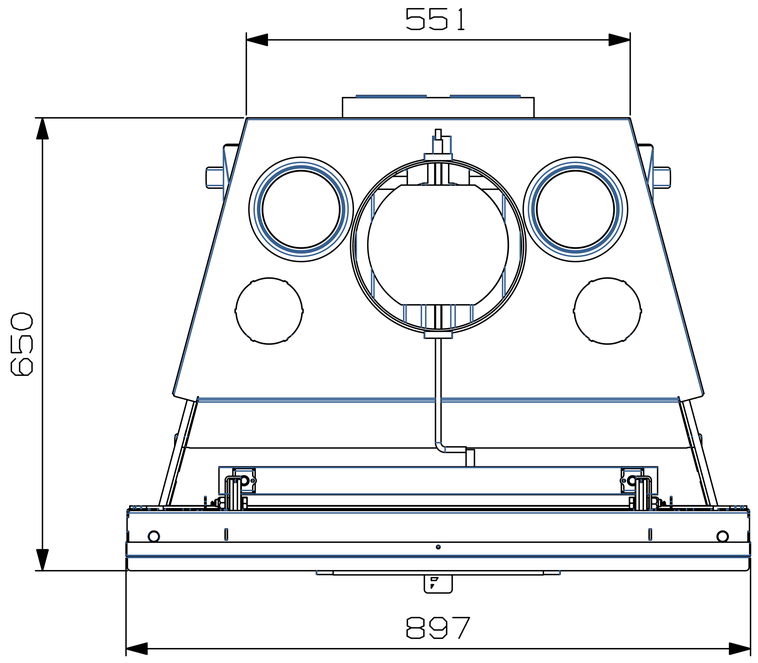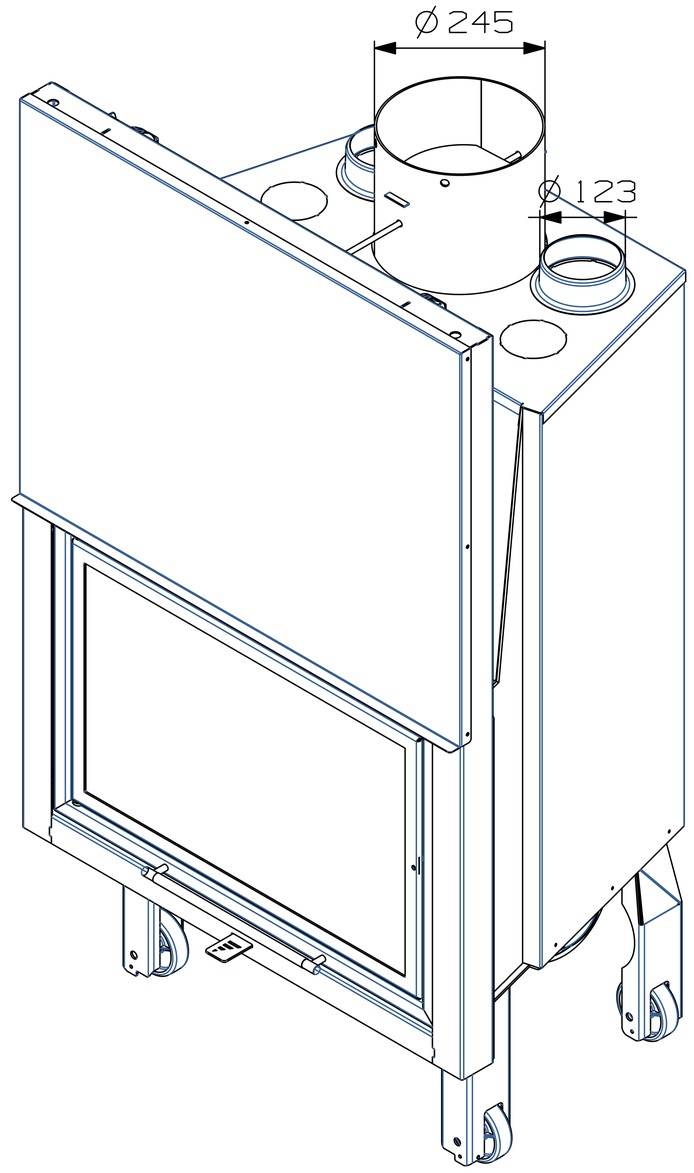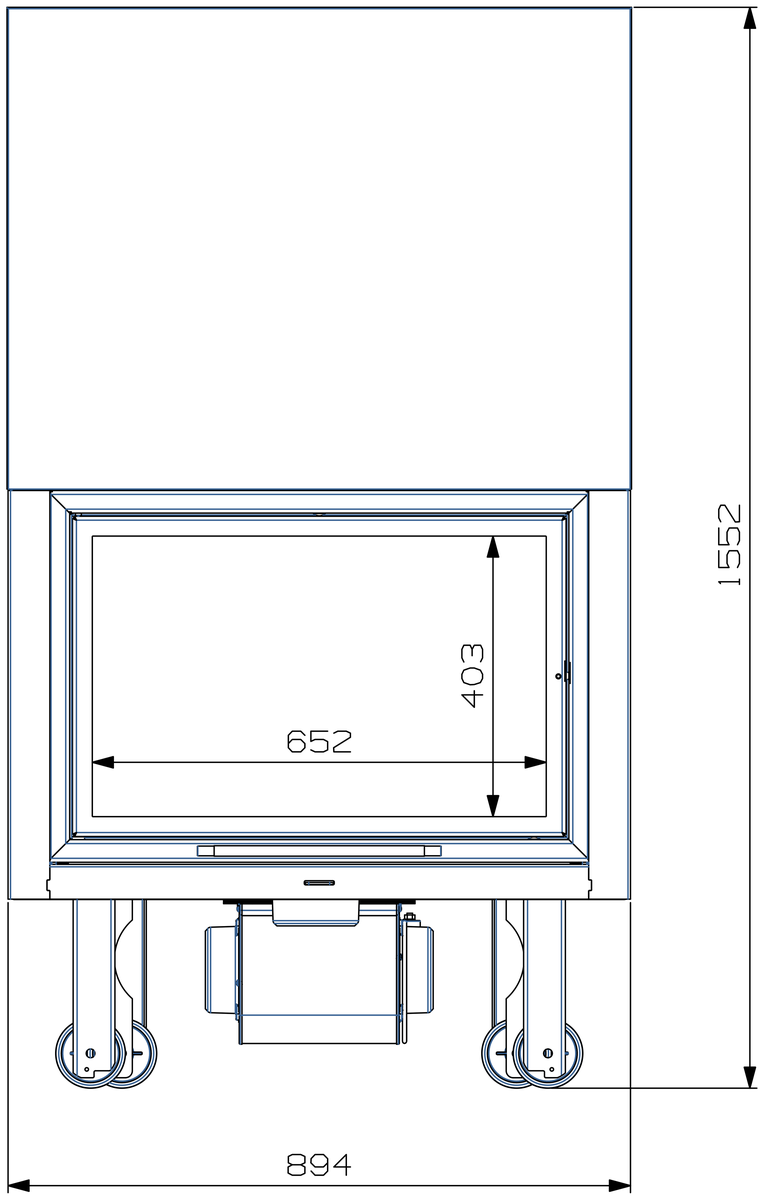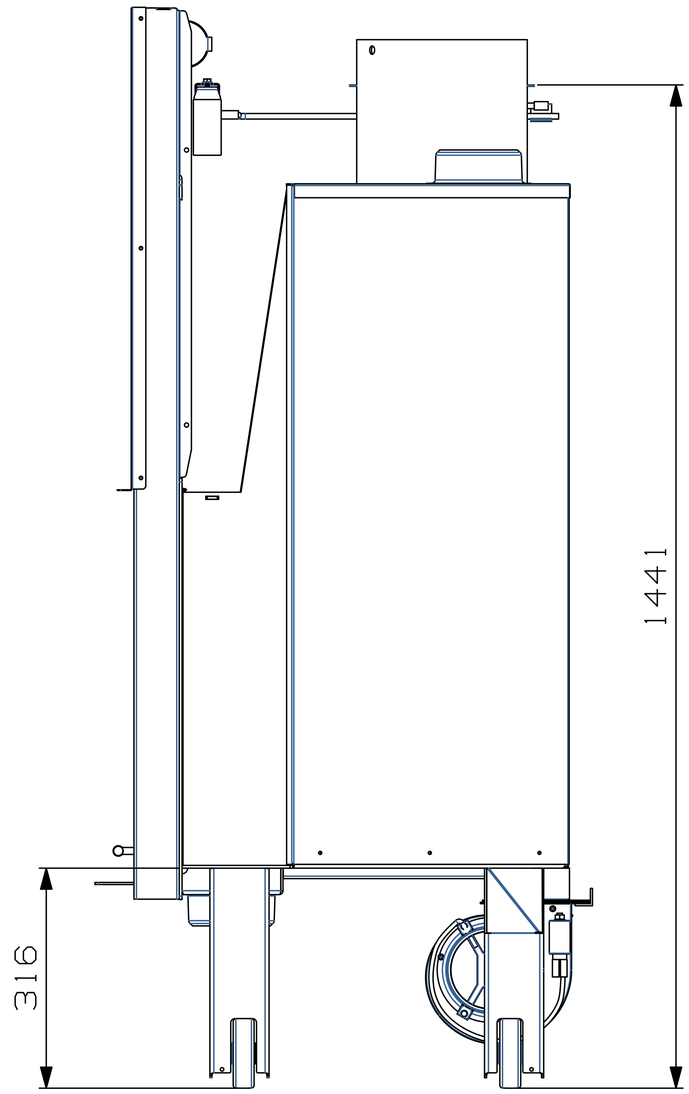AERO-S FLAT 80